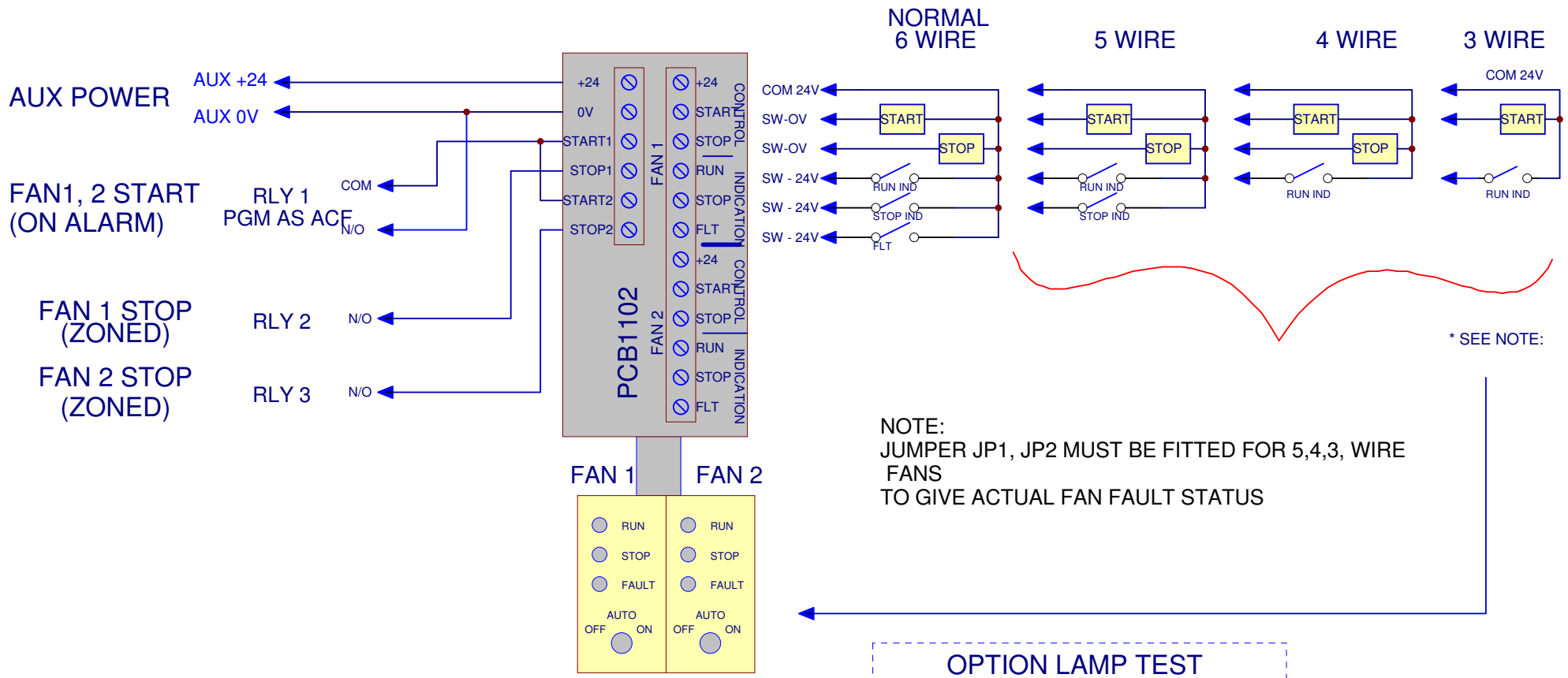

NOTE:
JUMPER JP1, JP2 MUST BE FITTED FOR 5,4,3, WIRE FANS
TO GIVE ACTUAL FAN FAULT STATUS

OPTION LAMP TEST

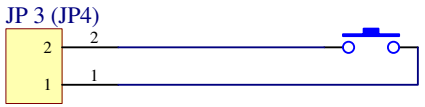

1 ALARM/ FAN START SW 0V

2 "STOP" MAPPED TO DUCT PROBE (SW 0V)

No.	Revision - revise on CAD. Do not amend by hand	Eng.	App.	Date

Copyright
This document is & shall remain the property of
Notifier Inertia Fire Systems ©
Unauthorised use of this document in any way is prohibited.

Drawing File No.
Q:\JOBS\PROTEL\GENERAL\1101\26-FAN-3-4-5

NOTIFIER INERTIA FIRE SYSTEMS

7 Columbia Court,
Norwest Business Park
Baulkham Hills NSW 2153
AUSTRALIA
Tel 61 2 9894 1444
Fax 61 2 9899 4156
Email: support@inertia.com.au

Sheet: 1 Of: 1
Drawn/Traced 17/9/3
Engineer/Design G.W.
Approved
This Drawing must not be used for Construction unless signed as approved

Title: 2600 FAN CONTROL WIRE CONFIGURATION

Size: A4
Drg. No. 26-FAN_3,4,5,6
Rev. A